Cable Tray / Ladder Tray

HT-XXXX-XXA-RAD

Cable Tray Fittings

Manufactured in the USA by MonoSystems, Inc.

HORIZONTAL TEE
B, C, D SERIES RAIL

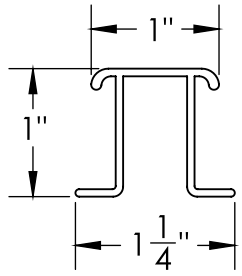

ALUMINUM RUNG
SECTION VIEW

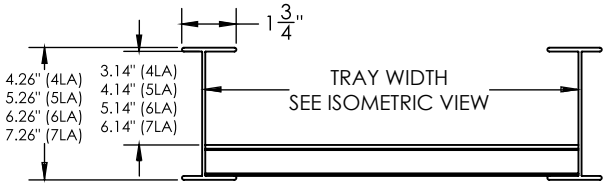

Notes

1.) Splice connectors and included hardware are provided with each fitting.

2) To calculate the correct product height for your application use the following formula: X" Width + X" Radius + X" Tangent = X" Height
Ex: 18"W + 12"R = 3" = 33" Height

To calculate the correct product length for your application, use the following formula: Width + 2*Radius + 2*Tangent = X" Length
Ex: 18"W + (2*12") 24"R + (2*3"T) = 48" Length

2.) Views for reference - do not scale.

CLASSIFIED UL

ORDERING DATA EXAMPLE:

HT-1218XXA

FITTING TYPE
HC= HORIZONTAL CROSS

RADIUS
12 = 12"
18 = 18"
24 = 24"
36 = 36"

WIDTH
09 = 9" WIDE
12 = 12" WIDE
18 = 18" WIDE
24 = 24" WIDE
30 = 30" WIDE
36 = 36" WIDE
42 = 42" WIDE
48 = 48" WIDE

HEIGHT
4 = 4" (3" DEPTH)
5 = 5" (4" DEPTH)
6 = 6" (5" DEPTH)
7 = 7" (6" DEPTH)

TRAY TYPE
L = LADDER
S = SOLID BOTTOM
SV = SOLID VENTED BOTTOM

TRAY MATERIAL
A = ALUMINUM
T = ALUMINUM POWDER COAT

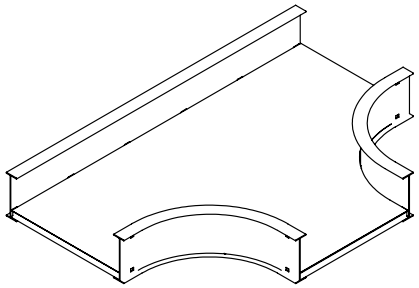

ALUMINUM HORIZONTAL TEE TRAY TYPE: SOLID BOTTOM "S"

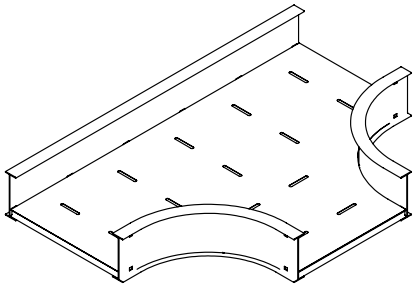

ALUMINUM HORIZONTAL TEE TRAY TYPE: SOLID VENTED "SV"

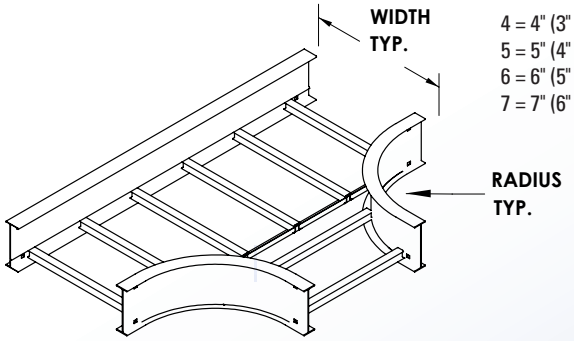

ALUMINUM HORIZONTAL TEE TRAY TYPE: LADDER "L"

ABNEX
An ABB and Niedax Joint Venture
Niedax MonoSystems | 716.821.1344
180 Hopkins Street | Buffalo, NY 14220
quotes.monosystems@abnex.com | www.abnex.com